2001
High School
Technical Sketching and Application

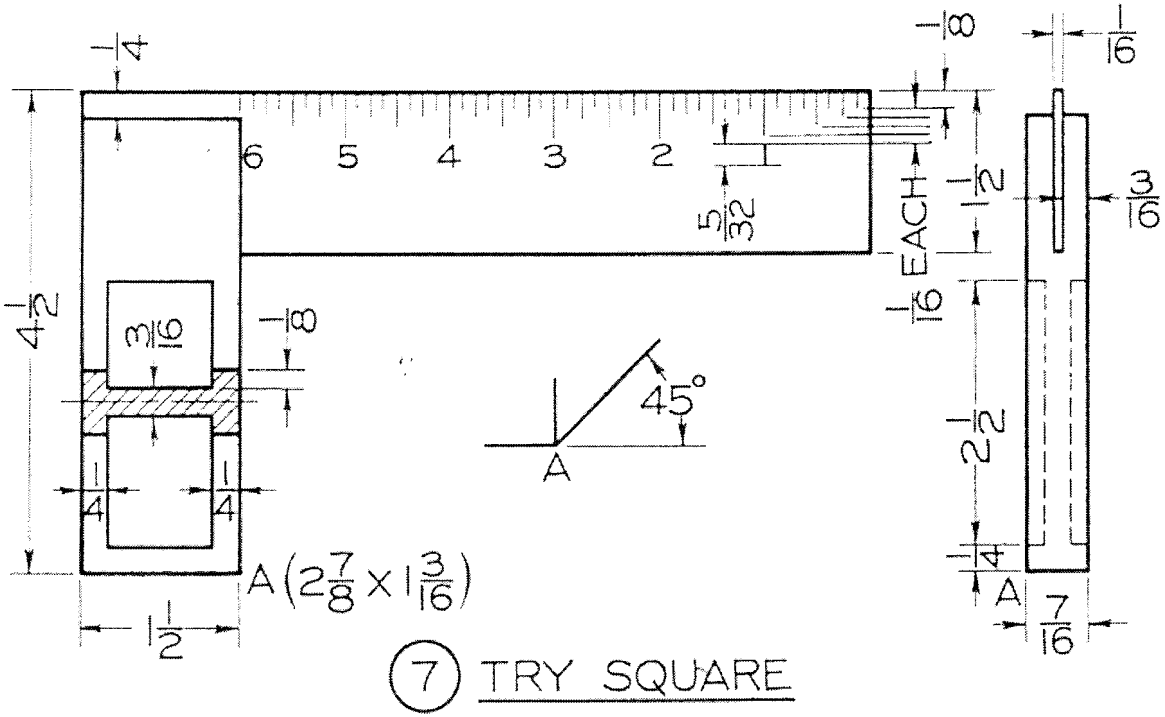

Draw an isometric drawing of the Try Square.